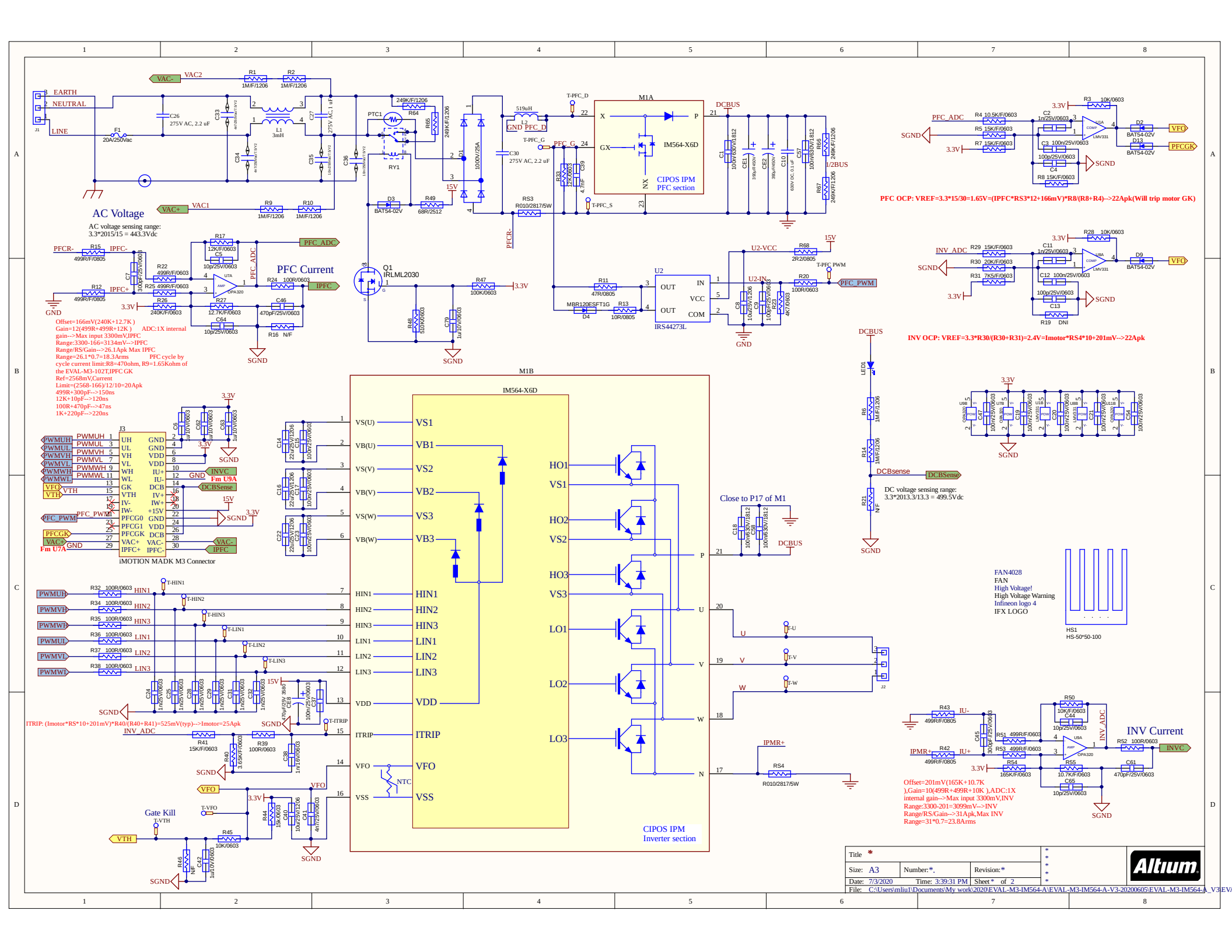
AC Voltage
AC voltage sensing range:
3.3*2015/15 = 443.3Vdc
PFC Current
Offset=166mV(240K+12.7K)
Gain=12(499R+499R+12K) ADC:1X internal
gain-->Max input 3300mV,IPFC
Range:3300-166=3134mV-->IPFC
Range/RS/Gain-->26.1Apk Max IPFC
Range=26.1*0.7=18.3Arms PFC cycle by
cycle current limit:R8=470ohm, R9=1.65Kohm of
the EVAL-M3-102T,IPFC GK
Ref=2568mV,Current
Limit=(2568-166)/12/10=20Apk
499R+300pF-->150ns
12K+10pF-->120ns
100R+470pF-->47ns
1K+220pF-->220ns
iMOTION MADK M3 Connector
M1A
IM564-X6D
CIPOS IPM
PFC section
M1B
IM564-X6D
CIPOS IPM
Inverter section
Close to P17 of M1
PFC OCP: VREF=3.3*15/30=1.65V=(IPFC*RS3*12+166mV)*R8/(R8+R4)-->22Apk(Will trip motor GK)
INV OCP: VREF=3.3*R30/(R30+R31)=2.4V=Imotor*RS4*10+201mV-->22Apk
DC voltage sensing range:
3.3*2013.3/13.3 = 499.5Vdc
FAN4028
FAN
High Voltage!
High Voltage Warning
Infineon logo 4
IFX LOGO
HS1
HS-50*50-100
INV Current
Offset=201mV(165K+10.7K
),Gain=10(499R+499R+10K),ADC:1X
internal gain-->Max input 3300mV,INV
Range:3300-201=3099mV-->INV
Range/RS/Gain-->31Apk,Max INV
Range=31*0.7=23.8Arms
Gate Kill
ITRIP: (Imotor*RS*10+201mV)*R40/(R40+R41)=525mV(typ)-->Imotor=25Apk
Title *
Size: A3
Number:*.
Revision:*
Date: 7/3/2020
Time: 3:39:31 PM
Sheet * of 2
File: C:\Users\mliu1\Documents\My work\2020\EVAL-M3-IM564-A\EVAL-M3-IM564-A-V3-20200605\EVAL-M3-IM564-A_V3.EVA

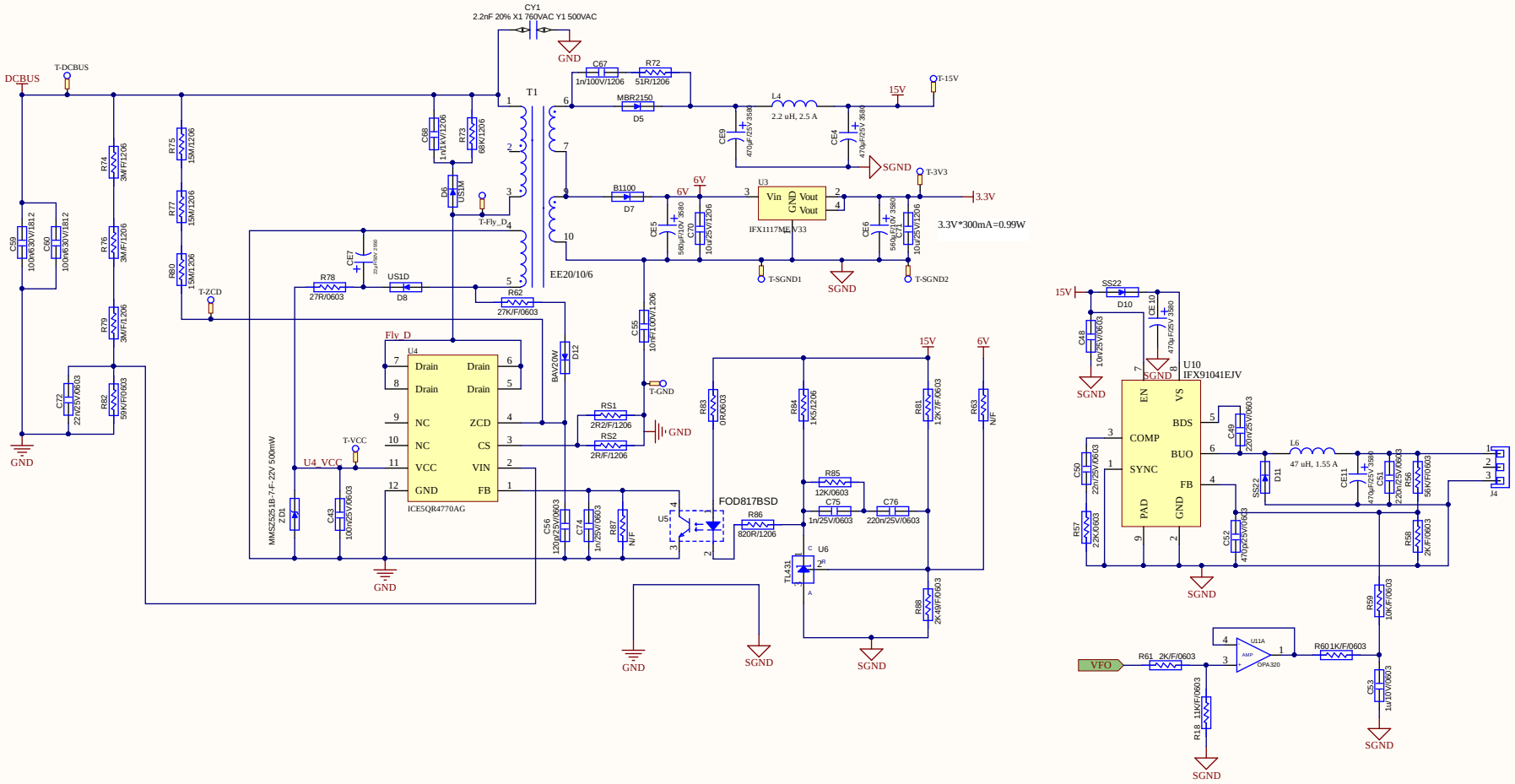

Title *			*
Size: A3	Number: *.	Revision: *	*
Date: 7/3/2020	Time: 3:39:32 PM	Sheet * of *	*
File: C:\Users\mliu1\Documents\My work\2020\EVAL-M3-IM564-A\EVAL-M3-IM564-A-V3-20200605\EVAL-M3-IM564-A_V3.EV			

Altium

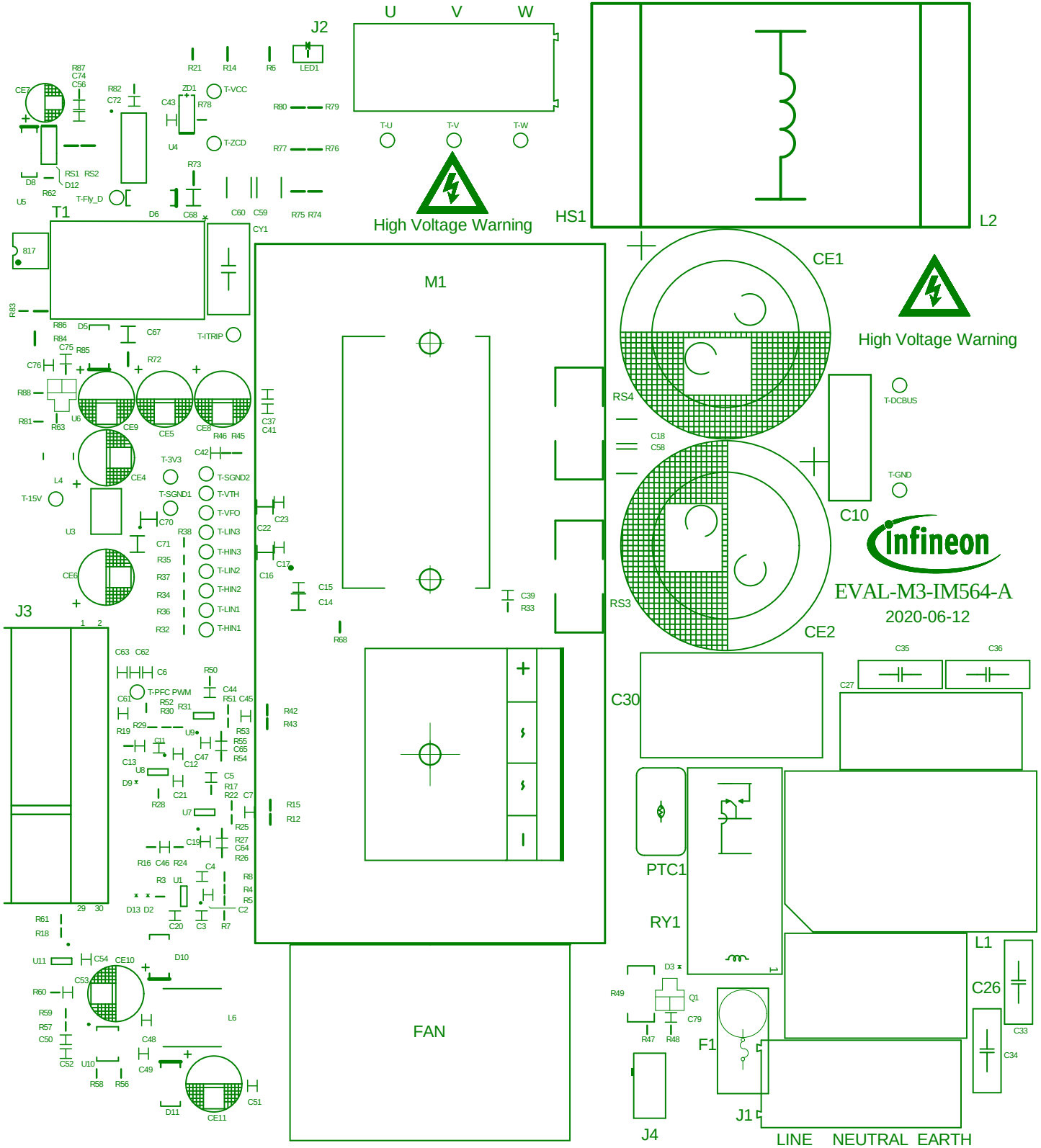
J2
U V W
T-U T-V T-W
High Voltage Warning
HS1
L2
CE1
High Voltage Warning
T1
M1
RS4
T-DCBUS
T-GND
C10
Infineon
EVAL-M3-IM564-A
2020-06-12
RS3
CE2
C30
J3
PTC1
RY1
L1
C26
F1
J1
J4
FAN
LINE NEUTRAL EARTH
T-PFC PWM
T-ITRIP
T-3V3
T-SGND1
T-SGND2
T-VTH
T-VFO
T-LIN3
T-HIN3
T-LIN2
T-HIN2
T-LIN1
T-HIN1
T-VCC
T-ZCD
T-Fly_D
T-15V

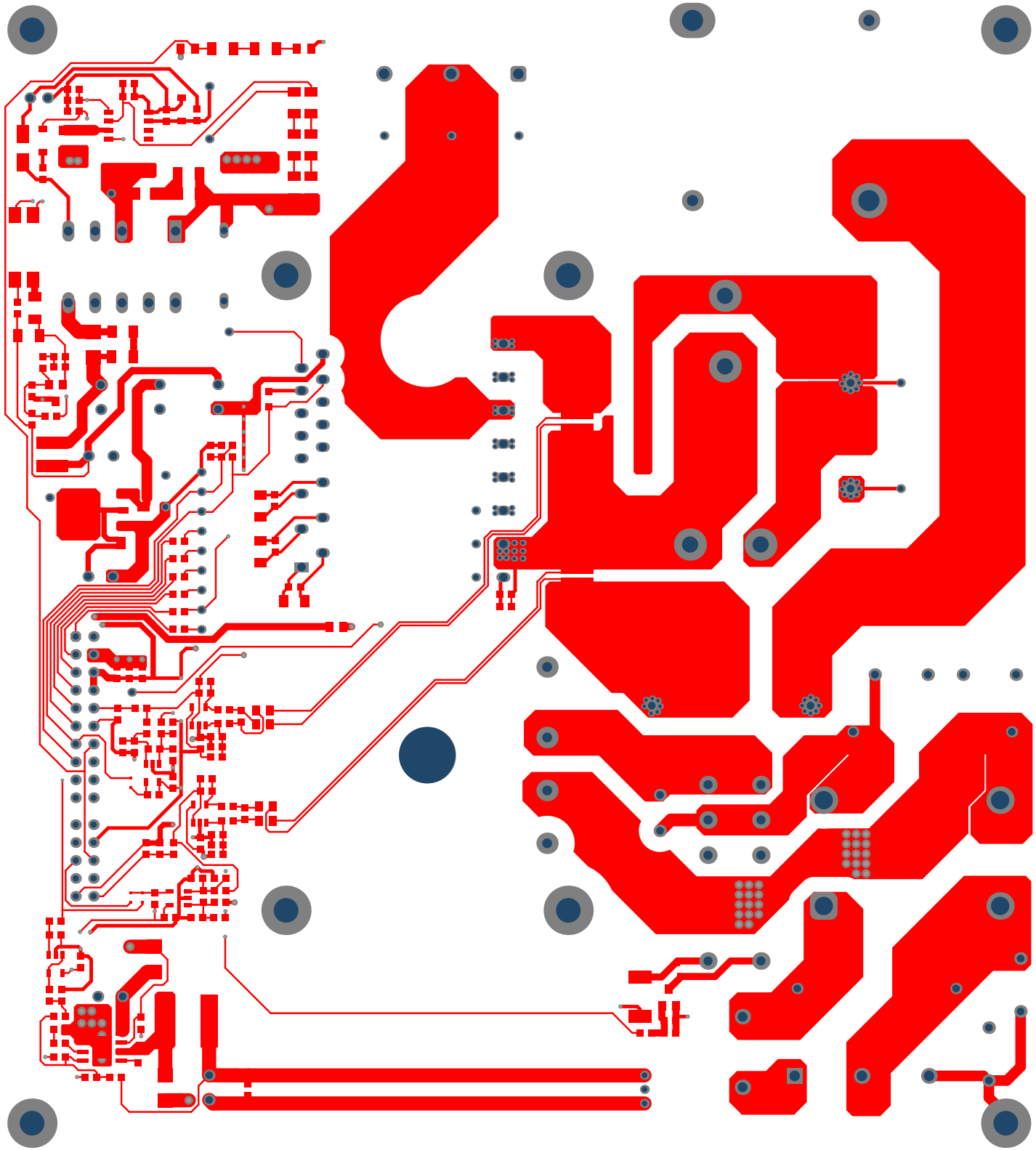

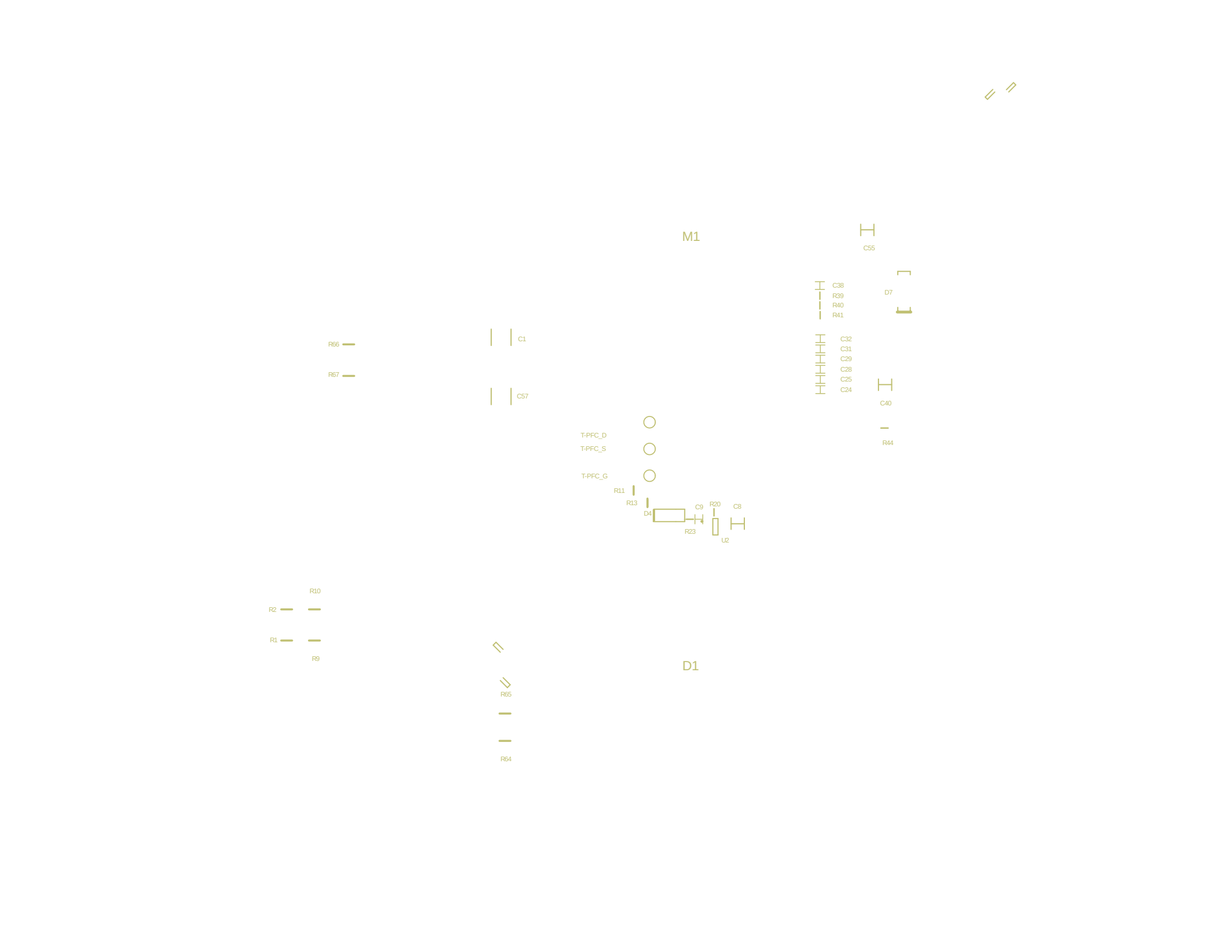
M1
C55
C38
R39
R40
R41
D7
C32
C31
C29
C28
C25
C24
C40
R44
C1
R66
R67
C57
T-PFC_D
T-PFC_S
T-PFC_G
R11
R13
D4
C9
R20
C8
R23
U2
R10
R2
R1
R9
D1
R65
R64

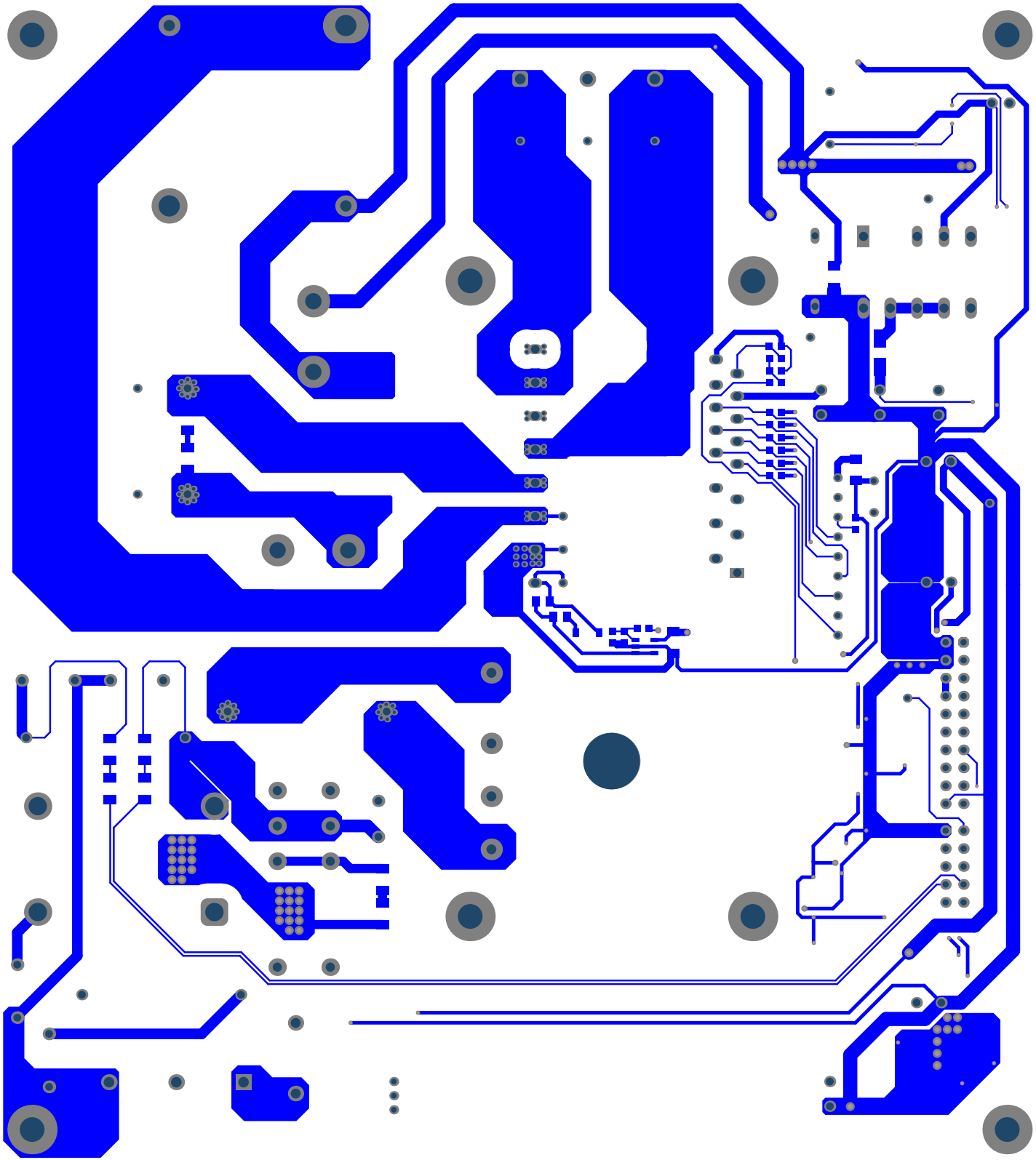

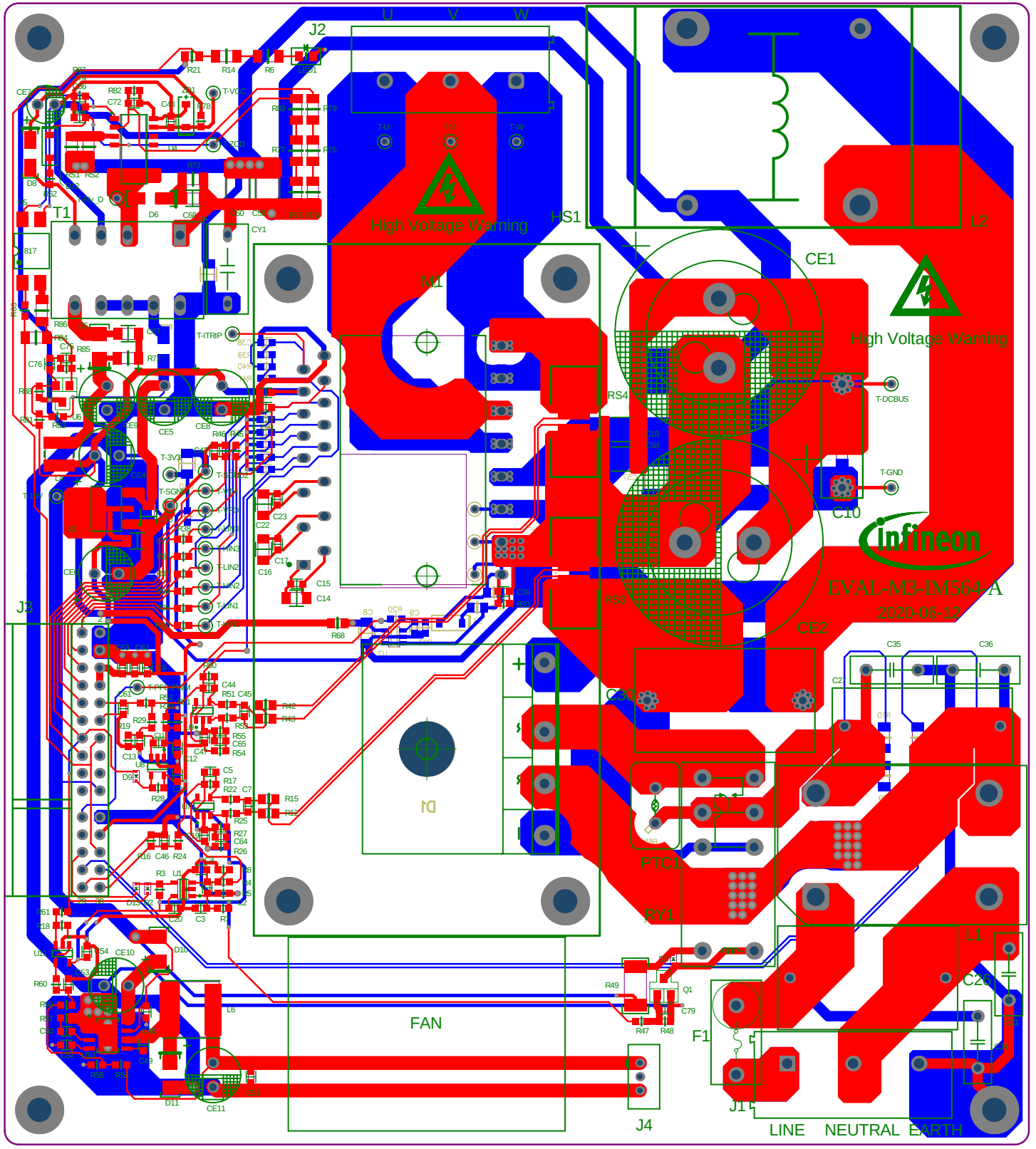
J2
U
V
W
High Voltage Warning
HS1
L2
CE1
M1
High Voltage Warning
T1
T-DCBUS
T-GND
C10
Infineon
EVAL-M3-IM564-A
2020-06-12
J3
CE2
C20
PTC1
RY1
L1
C26
FAN
F1
J4
J1
LINE
NEUTRAL
EARTH